Advances in Engineering Software 72 (2014) 3–7

Contents lists available at SciVerse ScienceDirect

Advances in Engineering Software

journal homepage: www.elsevier.com/locate/advengsoft

Review of energy conservation errors in finite element softwares caused by using energy-inconsistent objective stress rates

Jan Vorel [a], Zdeněk P. Bažant [b,*]

[a] Department of Mechanics, Faculty of Civil Engineering, Czech Technical University in Prague, Thákurova 7, 166 29 Praha 6, Czech Republic
[b] McCormick Institute, Department of Civil and Environmental Engineering, Northwestern University, 2145 Sheridan Road, CEE/A135, Evanston, IL 60208, USA

ARTICLE INFO

Article history:
Available online 3 July 2013

Keywords:
Finite strain
Finite elements
Incremental loading
Objective stress rates
Commercial software
Sandwich structures
Orthotropic materials
Material compressibility
Buckling

ABSTRACT

The paper briefly summarizes the theoretical derivation of the objective stress rates that are work-conjugate to various finite strain tensors, and then briefly reviews several practical examples demonstrating large errors that can be used by energy inconsistent stress rates. It is concluded that the software makers should switch to the Truesdell objective stress rate, which is work-conjugate to Green's Lagrangian finite strain tensor. The Jaumann rate of Cauchy stress and the Green-Naghdi rate, currently used in most software, should be abandoned since they are not work-conjugate to any finite strain tensor. The Jaumann rate of Kirchhoff stress is work-conjugate to the Hencky logarithmic strain tensor but, because of an energy inconsistency in the work of initial stresses, can lead to severe errors in the cases of high natural orthotropy or strain-induced incremental orthotropy due to material damage. If the commercial softwares are not revised, the user still can make in the user's implicit or explicit material subroutines (such as UMAT and VUMAT in ABAQUS) a simple transformation of the incremental constitutive relation to the Truesdell rate, and the commercial software then delivers energy consistent results.

1. Introduction

Large deformations of solids are an important practical problem, most challenging for computational predictions [1,2]. The main difficulty is to characterize the rate of stress change at various points of the solid in a way that gives correct work of deformation and describes the material deformation objectively, i.e., independently of the rigid-body rotations material elements.

Commercial softwares such as ABAQUS, LS-DYNA, ANSYS and NASTRAN have traditionally used an objective stress rate or increment which involves a convenient simplification that makes a certain error in energy conservation. For most applications this error is negligible. However, the authors show that large errors, of the order of 30–100%, can arise in certain problems of highly compressible materials, or soft-in-shear highly orthotropic materials, or materials which develop a highly orthotropic damage due to oriented cracking.

This article first explains the concept of energy-consistent objective stress rates. Then it briefly reviews several examples of large errors that can be caused by using commercial codes with an objective stress rate definition that is not energy consistent.

2. Review of energy-consistent objective stress rates

While the usual way to derive the objective stress rates has been based on tensorial coordinate transformations, the variational energy approach [3] is preferable because it also ensures energy consistency with the finite strain tensor. Consider incremental finite strain tensors ϵ_{ij} relative to the initial (stressed) state at the beginning of the load step, using the initial (Lagrangian) coordinates x_i ($i = 1, 2, 3$) of material points. A broad class of equally admissible finite strain tensors is represented by the Doyle-Ericksen tensors whose second-order approximation is

$$\epsilon_{ij}^{(m)} = e_{ij} + \frac{1}{2}u_{k,i}u_{k,j} - \frac{1}{2}(2-m)e_{ki}e_{kj} \tag{1}$$

where u_i are the material point displacements, $e_{ij} = (u_{i,j} + u_{j,i})/2$ = small (linearized) strain tensor, and subscripts preceded by a comma denote partial derivatives. The case $m = 2$ gives the Green-Lagrangian strain tensor, $m = 1$ gives the Biot strain tensor, $m = 0$ gives the Hencky (logarithmic) strain tensor, $m = -2$ gives the Almansi-Lagrangian strain tensor. The increments of nonsymmetric small Lagrangian (or first Piola–Kirchhoff) stress τ_{ij} and small stress $\sigma_{ij}^{(m)}$, which is symmetric and objective (an incremental second Piola–Kirchhoff stress), are defined with respect to the Cauchy stress S_{ij}^0 (true stress) in the initial state by the relations

$$T_{ij} = S_{ij}^0 + \tau_{ij} \text{ and } \Sigma_{ij}^{(m)} = S_{ij}^0 + \sigma_{ij}^{(m)} \tag{2}$$

* Corresponding author.
E-mail addresses: jan.vorel@fsv.cvut.cz (J. Vorel), z-bazant@northwestern.edu (Z.P. Bažant).

0965-9978/$ - see front matter © 2013 Elsevier Ltd. All rights reserved.
http://dx.doi.org/10.1016/j.advengsoft.2013.06.005

Then the work δW done at small deformations of a material element of unit initial volume can be expressed in two equivalent ways:

$$\delta W = \left(S^0_{ij} + \tau_{ij}\right)\delta u_{i,j} \tag{3}$$

$$\delta W = \left(S^0_{ij} + \sigma^{(m)}_{ij}\right)\delta \epsilon^{(m)}_{ij} \tag{4}$$

where $\delta\epsilon^{(m)}_{ij}$ is the arbitrary variation of incremental finite strain tensor $\epsilon^{(m)}_{ij}$. Since the first-order work $S^0_{ij}\delta u_{i,j}$ is canceled in the virtual work equation of equilibrium by the work of loads, only the second-order work is of interest.

The two work expressions in Eqs. (3) and (4) must be equal. Impose this equality and substitute $S_{ij}\delta u_{i,j} = S_{ij}\delta e_{ij} = S_{ij}\dot{e}_{ij}\Delta t$ (by virtue of symmetry of S_{ij}), $\sigma^{(m)}_{ij}\delta\epsilon^{(m)}_{ij} \approx \sigma^{(m)}_{ij}\dot{e}_{ij}\Delta t$ (which suffices for second-order work accuracy in $u_{i,j}$), $S_{ij}\delta\epsilon^{(m)}_{ij} = S_{pq}(\partial\epsilon^{(m)}_{pq}/\partial u_{i,j})\,v_{i,j}\Delta t$ and $\sigma^{(m)}_{ij} = \widehat{S}^{(m)}_{ij}\Delta t$ (where $v_{i,j}\,\Delta t = \delta u_{i,j}$, and $v_i = \dot{u}_i$). Then introduce the variational condition that the resulting equation must be valid for any $\delta u_{i,j}$. This yields [3,5]:

$$\widehat{S}^{(m)}_{ij} = \dot{T}_{ij} - S_{pq}\,\frac{\partial^2\left(\epsilon^{(m)}_{pq} - e_{pq}\right)}{\partial t\;\partial u_{i,j}} \tag{5}$$

where $\dot{T}_{ij} = \partial T_{ij}/\partial t = \partial\tau_{ij}/\partial t = \dot{S}_{ij} - S_{ik}v_{j,k} + S_{ij}v_{k,k} = \lim_{\delta t\to 0}\tau_{ij}/\delta t$, $T_{ij} = S^0_{ij} + \tau_{ij}$, and $\dot{S}_{ij} = \partial S_{ij}/\partial t =$ material rate of Cauchy stress. Evaluating Eq. (5) for general m and for $m = 2$, one gets a general expression for the objective stress rate [3,5]:

$$\widehat{S}^{(m)}_{ij} = \widehat{S}^{(2)}_{ij} + \frac{1}{2}(2-m)(S_{ik}\dot{e}_{kj} + S_{jk}\dot{e}_{ki}) \tag{6}$$

where $\widehat{S}^{(2)}_{ij} = \dot{S}_{ij} - S_{kj}v_{i,k} - S_{ki}v_{j,k} + S_{ij}v_{k,k} =$ Truesdell rate. For $m = 2$, Eq. (5) reduces to the Truesdell rate. For $m = 1$ it gives the Biot rate. For $m = 0$, Eq. (5) gives the Jaumann rate of Kirchhoff stress,

$$\widehat{S}^{(0)}_{ij} = \dot{S}_{ij} - \dot{\omega}_{ik}S_{kj} - S_{ik}\dot{\omega}_{kj} + S_{ij}v_{k,k} \tag{7}$$

This rate is work-conjugate to the Hencky (or logarithmic) strain. The Jaumann (or co-rotational) rate of Cauchy stress cannot be obtained from Eq. (5) and thus is work-conjugate with no finite strain tensor.

When different m are considered, the tangential stress–strain relation must be written as $\widehat{S}^{(m)}_{ij} = C^{(m)}_{ijkl}\dot{e}_{kl}$ where moduli $C^{(m)}_{ijkl}$ are associated with strain tensor $\epsilon^{(m)}_{ij}$. They are different for different choices of m, and are related as follows [3,5]:

$$C^{(m)}_{ijkl} = C^{(2)}_{ijkl} + (2-m)[S_{ik}\delta_{jl}]_{sym} \tag{8}$$

$$[S_{ik}\delta_{jl}]_{sym} = \frac{1}{4}(S_{ik}\delta_{jl} + S_{jk}\delta_{il} + S_{il}\delta_{jk} + S_{jl}\delta_{ik}) \tag{9}$$

Here $C^{(2)}_{ijkl}$ are the tangential moduli associated with the Green-Lagrangian strain ($m = 2$), taken as a reference; $S_{ij} =$ current Cauchy stress, and $\delta_{ij} =$ Kronecker delta. Using Eq. (9) in each finite element in each loading step, one can convert a black-box commercial finite element program from one objective stress rate to another (this is done in the user's material subroutine of the commercial software).

3. Errors caused by energy inconsistency

Many finite element softwares utilize stress rates that are not associated with any finite strain. Although this has been no problem for the vast majority of applications to metals, enormous errors can result in some cases. Other errors can arise even if an energy consistent stress rate is employed, because of an improper choice of the finite strain measure. As shown in [3], $m = 2$ is required for all the situations where the tangential moduli are highly orthotropic and the dominant compressive principal stress has the direction of strong orthotropy. Thus, e.g., $m = 2$ needs to be used for polymers reinforced by unidirectional or bidirectional stiff fibers (note that, on the other hand, $m = -2$ is required when the maximum compressive stress is normal to the strong orthotropy directions as, e.g., for elastomeric bridge or seismic isolation bearings, and for other principal stress ratios the correct m value lies between -2 and 2; see [4, Eq. (29)]).

This paper reviews several recent studies of this problem and gives three examples of the error caused by the wrong use or definition of the objective stress rate and the associated finite strain tensor.

3.1. Stability of sandwich structures

A salient characteristic of sandwich plates is that the shear strain in a soft core is important for buckling. The shear buckling is a problem with a hundred-year controversial history. It requires using the stability criteria for a three-dimensional continuum, which were for half a century a subject of polemics. Although the polemics were resolved four decades ago, some authors still dispute various aspects. All the historical controversies can be traced to the arbitrariness in choosing the finite strain measure and to inattention to the work-conjugacy requirement. This requirement means that the (doubly contracted) product of the incremental objective stress tensor with the incremental finite strain tensor must give a correct expression for the second-order work [5, chapter 11].

As an example, the cylindrical buckling, which is a special case of plate buckling, is analyzed. The short sides of the sandwich panel are clamped and the longer edges are free; Fig. 1. The core is assumed to be linear elastic and the skins are elastic and quasi-isotropic. The material properties are summarized in Table 1. For numerical simulation, the plate is homogenized through its whole thickness and uniform effective material properties for the combined thickness of the core and skins are used. This defines a homogeneous highly orthotropic plate [6].

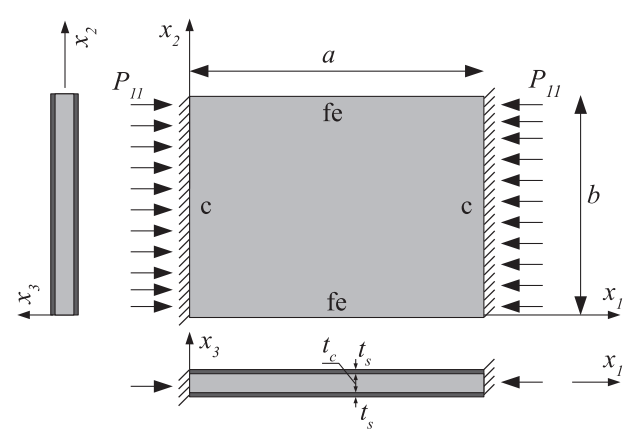

Fig. 1. Plate analyzed: both edges perpendicular to the axis x_1 are clamped (c) and the longer edges are not supported (fe).

Table 1
Material properties (m – measured, c – calculated, l – lower bounds from technical specifications [7]).

		E (GPa)	ν (–)	G (GPa)
CFRP (skins)	In-plane	46^m	0.3^m (ν_{12})	17.7^m
	Transversal	5.7^c	0.24^c (ν_{13})	2.0^c
H200 (core)		0.23^l	0.353^l	0.085^l

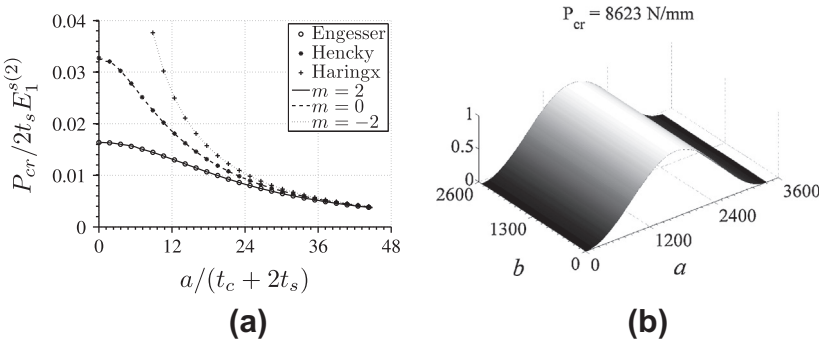

Fig. 2. Cylindrical buckling: (a) evolution of normalized critical buckling load of rectangular plates of different span *a*, for fixed *b* = 2540 mm, (b) deflection curve for the first buckling mode for *m* = 2, *a* = 3380 mm.

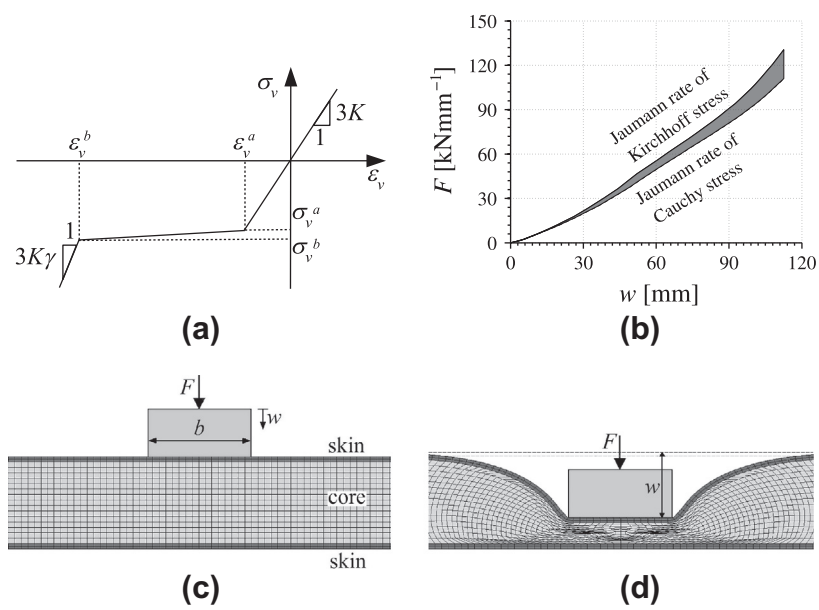

Fig. 3. Indentation of a foam-core sandwich: (a) volumetric stress–strain relation of the core, (b) load–displacement curves, (c) undeformed configuration of a sandwich plate with finite-element mesh, (d) deformed configuration with deformed mesh.

As seen in Fig. 2a, the use of the same constant elastic moduli for different strain measures causes a major discrepancy among the solutions for different *m*, with differences up to about 100%, and can lead to dangerous overestimation of the buckling load. However, this discrepancy becomes less than about 1% when the both the core and the skins of the sandwich are discretized separately through the thickness (but such discretization would not be easily implemented for a large ship with hundreds of large sandwich plates). Fig. 3b shows the correct buckling mode, which is obtained if the $\mathbf{C}^{(2)}$ is assumed to be constant.

3.2. Indentation of a foam-core sandwich

Many softwares use the Jaumann rate of Cauchy stress which is the source of error in this case. In [5,8] it was shown that this stress rate is not work-conjugated with any strain measure due to the missing volumetric term. The error in using the Jaumann rate of Cauchy stress was pointed out in the literature long ago [3], but has either been ignored or thought to cause only negligible errors. Indeed, the error is generally less than 0.1 percent for metals and other materials that are inelastically incompressible and elastically almost incompressible. It now appears, though, that this is not true for highly compressible inelastic materials; for example, rigid foams (polymeric, metallic and ceramic), honeycomb, certain soils (loess, silt, under-consolidated and organic soils), some rocks (pumice and tuff), osteoporotic bone, light wood, carton and various biological tissues.

The problem presented here is of interest for prospective new designs of very light and fuel-efficient large ships in which the hull is clad by sandwich panels of typical span 4 m, which have a foam

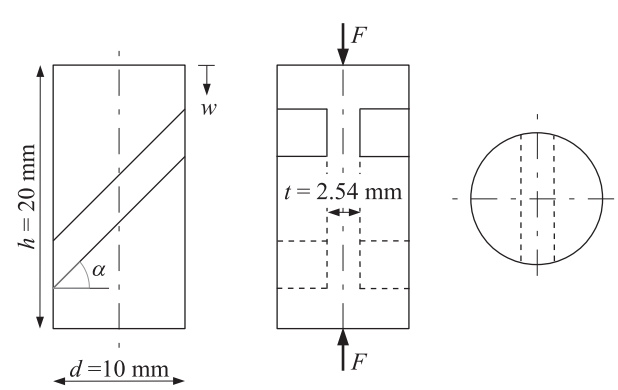

Fig. 4. Schematic representation of the shear compression specimen.

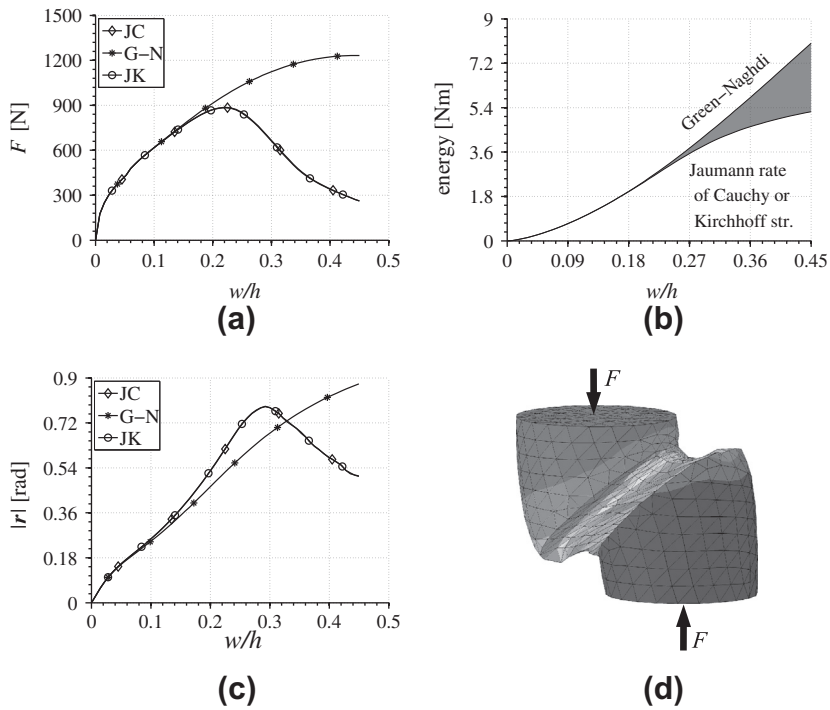

Fig. 5. Comparison of different stress rates: (a) loading curves (JC = Jaumann rate of Cauchy stress, JK = Jaumann rate of Kirchhoff stress, G-N = Green-Naghdi stress rate), (b) energy error, (c) rotation evolution in the notched part (norm of rotation pseudovector), (d) deformed mesh.

core approximately 150 mm thick and are supported on tubular steel ribs. One important design consideration is the impact of floating objects or ice floes onto the sandwich. Therefore, the study is made on the sandwich shown in Fig. 3c and d which is indented in a two-dimensional plane-strain mode by a rigid rectangular object of width $b = 160$ mm. For ease of interpretation, the indentation is considered to be static. The material properties of sandwich panel are shown in Table 1. The bottom skin is assumed to be fixed on a rigid base and to extend far enough so that the boundary conditions at the rims do not matter. The object is assumed to be in perfect contact with the top skin.

The core consists of a vinyl foam of mass density 200 kg/m^3, marketed as Divinycell 200, typically used for marine sandwich structures. The skin is assumed elastic and quasi-isotropic. The constitutive properties of the foam in this simulation are simplified as follows: von Mises (or J_2) plasticity in shear, with shear yield stress $\tau_0 = 62$ MPa, and the volumetric compression defined by the tri-linear diagram plotted in Fig. 3a. The middle, nearly flat, portion of this diagram corresponds to collapse of foam cells (modeled in [9]). The final stiffening from initial bulk modulus K to bulk modulus γK is caused by the closing of collapsed cells with the opposite walls pressed into contact. The parameters used for the simulations are $\sigma_v^a = -2$ MPa, $\sigma_v^b = -2.1$ MPa, $\varepsilon_v^a = \sigma_v^a/3K$, $\varepsilon_v^b = \sigma_v^b/3K$, $\alpha = (\sigma_v^a - \sigma_v^b)/(\varepsilon_v^a - \varepsilon_b) = 0.02$ and $\gamma = 1.5$.

The resulting load deflection curves are plotted in Fig. 3b. The difference in the maximum load reached is 17.7% compared to the uncorrected ABAQUS value, which is obtained with the Jaumann rate of Cauchy stress ([8] presents another example of indentation of a sandwich plate with foam core in which the error in the resisting force is 28.8% and in the work of indentation is 15.3%).

3.3. Shear-compression failure of metallic part

A possible numerical error caused by the wrong definition of the stress rate (the Jaumann rate of Cauchy (Kirchhoff) rate vs. the Green-Naghdi rate) is demonstrated in this section. As an example, the experiment presented by Vural et al. [10] is utilized. The shear-compression specimen is shown in Fig. 4. The material of the specimen is assumed to be the 1018 cold-rolled steel. Unfortunately, Vural et al. did not present all material parameters and so the following parameters, typical of this kind of steel, are assumed: Young's modulus $E = 200$ GPa; Poisson's ratio $\nu = 0.29$; yield strength $f_y = 350$ MPa; and hardening modulus $H = 2$ GPa. To simulate different stress rates, the user material subroutine (VUMAT) in the commercial software ABAQUS [11] is employed. The material behavior is modeled by means of the von Mises plasticity with linear kinematic hardening. The error with regard to the law of energy conservation is shown in Fig. 5. Because of the small volume change during the loading, the Jaumann rate Cauchy stress delivers very similar results, as depicted in Fig. 5a and c. The standard ABAQUS first-order tetrahedral element C3D4 is used (Fig. 5d). Note that the same geometry and mesh was utilized for all calculations.

4. Conclusions

To remedy these problems, the software makers should switch to the Truesdell objective stress rate, which is work-conjugate to Green's Lagrangian finite strain tensor ($m = 2$). The Jaumann rate of Cauchy stress and the Green-Naghdi rate should be abandoned since they are not work-conjugate to any finite strain tensor. The Jaumann rate of Kirchhoff stress is work-conjugate to the Hencky logarithmic strain tensor, but can lead to severe errors in the cases of high natural orthotropy or strain-induced incremental orthotropy.

It may be objected that the Hencky strain tensor ant the Jaumann rates are more intuitive for constitutive modeling. True, but it is no problem to convert the constitutive relation, once formulated, to the Truesdell rate, which can be done either by the used or automatically in the software.

Even if the commercial softwares are not revised, one can still make in the user's implicit or explicit material subroutines (such

as UMAT and VUMAT in ABAQUS) a simple transformation of the incremental constitutive relation to the Truesdell rate, as shown in [3,12,8], and the commercial software then delivers correct results.

Acknowledgements

Financial support under Grant N00014-11-1-0155 from the Office of Naval Research to Northwestern University, monitored by Dr. Roshdy Barsoum, and also under the research project GAČR P105/12/P353, are gratefully acknowledged.

References

[1] Ji W, Waas A, Bažant Z. On the importance of work-conjugacy and objective stress rates in finite deformation incremental finite element analysis. J Appl Mech.
[2] Ji W, Waas A. The two-dimensional elasticity solution for the buckling of a thick orthotropic ring under external pressure loading. J Appl Mech.
[3] Bažant Z. A correlation study of formulations of incremental deformation and stability of continuous bodies. J Appl Mech 1971;38(4):919–28.
[4] Bažant Z, Beghini A. Stability and finite strain of homogenized structures soft in shear: sandwich or fiber composites, and layered bodies. Int J Solids Struct 2006;43(6):1571–93.
[5] Bažant Z, Cedolin L. Stability of structures. Elastic, inelastic, fracture and damage theories. New York: Oxford University Press; 1991.
[6] Plantema J. Sandwich construction: the bending and buckling of sandwich beams, plates, and shells. New York: John Wiley and Sons; 1966.
[7] Fagerberg L. Wrinkling and compression failure transition in sandwich panels. J Sandwich Struct Mater 2004;6(2):129–44.
[8] Bažant Z, Gattu M, Vorel J. Work conjugacy error in commercial finite element codes: Its magnitude and how to compensate for it. Proc Roy Soc A 2012;468:3047–58.
[9] Brocca M, Bažant Z, Daniel I. Microplane model for stiff foams and finite element analysis of sandwich failure by core indentation. Int J Solids Struct 2001;38(44):8111–32.
[10] Vural M, Rittel D, Ravichandran G. Large strain mechanical behavior of 1018 cold-rolled steel over a wide range of strain rates. Metall Mater Trans A 2003;34(12):2873–85.
[11] Dassault Systèmes. ABAQUS FEA; 2010. <http://www.simulia.com>.
[12] Vorel J, Bažant Z, Gattu M. Elastic soft-core sandwich plates: critical loads and energy errors in commercial codes due to choice of objective stress rate. J Appl Mech 2013; 80(4): 10.